YOUR MOST
VALUABLE
PARTNER
FOR
COSMETICS
PipeValves
Since 1963

Valve Actuation

Steam

Instruments

Hot Water

Industrial PVF

YOUR MOST VALUABLE PARTNER

FOR PYROMATION PRODUCTS

PipeValves™

Since 1963

www.PipeValves.com
800.467.7122

Warning: Do not use this literature in place of reading, understanding, and following the manufacturer's spec sheets and operator's manual instructions which are available on their website.

Valve Actuation

Steam

Instruments

Hot Water

Industrial PVF

YOUR MOST VALUABLE PARTNER

FOR TEKTROL PRESSURE & TEMPERATURE

PipeValves™

Since 1963

www.PipeValves.com
800.467.7122

Warning: Do not use this literature in place of reading, understanding, and following the manufacturer's spec sheets and operator's manual instructions which are available on their website.

Valve Actuation

Steam

Instruments

Hot Water

Industrial PVF

YOUR MOST VALUABLE PARTNER

FOR VEGA LEVEL DETECTION

PipeValves™

Since 1963

www.PipeValves.com
800.467.7122

Warning: Do not use this literature in place of reading, understanding, and following the manufacturer's spec sheets and operator's manual instructions which are available on their website.

Valve Actuation

Steam

Instruments

Hot Water

Industrial PVF

YOUR MOST VALUABLE PARTNER

FOR ARMSTRONG STEAM PRODUCTS

PipeValves™

Since 1963

www.PipeValves.com
800.467.7122

Warning: Do not use this literature in place of reading, understanding, and following the manufacturer's spec sheets and operator's manual instructions which are available on their website.

Valve Actuation

Steam

Instruments

Hot Water

Industrial PVF

YOUR MOST VALUABLE PARTNER

FOR

A-T CONTROLS THREADED & SOCKET WELD BALL VALVES

PipeValves™

Since 1963

www.PipeValves.com
800.467.7122

Warning: Do not use this literature in place of reading, understanding, and following the manufacturer's spec sheets and operator's manual instructions which are available on their website.

Valve Actuation

Steam

Instruments

Hot Water

Industrial PVF

YOUR MOST VALUABLE PARTNER

FOR A-T CONTROLS RACK & PINION ACTUATORS

PipeValves™

Since 1963

www.PipeValves.com
800.467.7122

Warning: Do not use this literature in place of reading, understanding, and following the manufacturer's spec sheets and operator's manual instructions which are available on their website.

Valve Actuation

Steam

Instruments

Hot Water

Industrial PVF

YOUR MOST VALUABLE PARTNER

FOR A-T CONTROLS BUTTERFLY VALVES

PipeValves™

Since 1963

www.PipeValves.com
800.467.7122

Warning: Do not use this literature in place of reading, understanding, and following the manufacturer's spec sheets and operator's manual instructions which are available on their website.

Valve Actuation

Steam

Instruments

Hot Water

Industrial PVF

YOUR MOST VALUABLE PARTNER

FOR A-T CONTROLS 3-PIECE BALL VALVES

PipeValves™

Since 1963

www.PipeValves.com
800.467.7122

Warning: Do not use this literature in place of reading, understanding, and following the manufacturer's spec sheets and operator's manual instructions which are available on their website.

Valve Actuation

Steam

Instruments

Hot Water

Industrial PVF

YOUR MOST VALUABLE PARTNER

FOR PARKER SOLENOID VALVES

PipeValves™

Since 1963

www.PipeValves.com
800.467.7122

Warning: Do not use this literature in place of reading, understanding, and following the manufacturer's spec sheets and operator's manual instructions which are available on their website.

Valve Actuation

Steam

Instruments

Hot Water

Industrial PVF

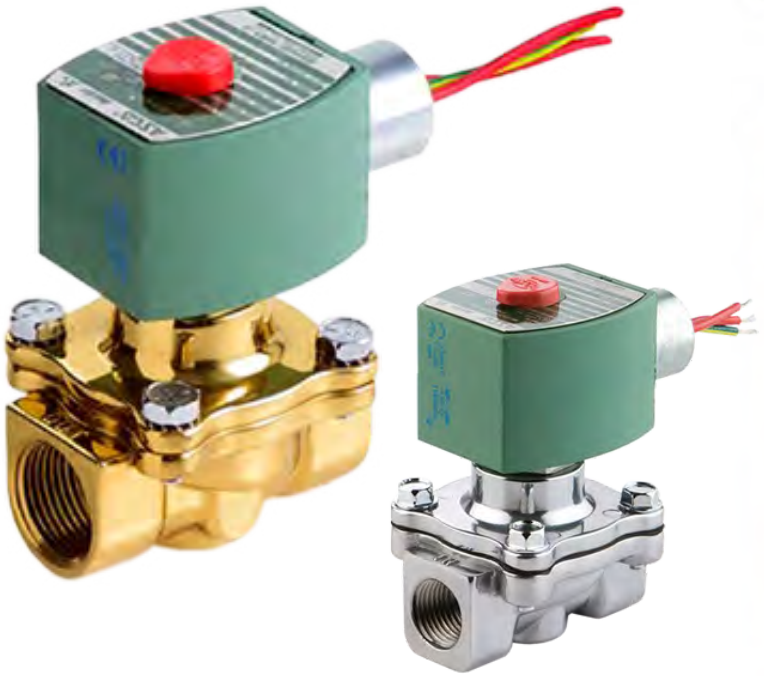

YOUR MOST VALUABLE PARTNER

FOR ASCO SOLENOID VALVES

PipeValves™

Since 1963

www.PipeValves.com
800.467.7122

Warning: Do not use this literature in place of reading, understanding, and following the manufacturer's spec sheets and operator's manual instructions which are available on their website.

Valve Actuation

Steam

Instruments

Hot Water

Industrial PVF

YOUR MOST VALUABLE PARTNER

FOR TYLOK FITTINGS & VALVES

PipeValves™

Since 1963

www.PipeValves.com
800.467.7122

Warning: Do not use this literature in place of reading, understanding, and following the manufacturer's spec sheets and operator's manual instructions which are available on their website.

Valve Actuation

Steam

Instruments

Hot Water

Industrial PVF

YOUR MOST VALUABLE PARTNER

FOR TRERICE PRODUCTS

PipeValves™

Since 1963

www.PipeValves.com

800.467.7122

Warning: Do not use this literature in place of reading, understanding, and following the manufacturer's spec sheets and operator's manual instructions which are available on their website.

Valve Actuation

Steam

Instruments

Hot Water

Industrial PVF

YOUR MOST VALUABLE PARTNER

FOR SPIRAX SARCO BOILER CONTROLS

PipeValves™

Since 1963

www.PipeValves.com
800.467.7122

Warning: Do not use this literature in place of reading, understanding, and following the manufacturer's spec sheets and operator's manual instructions which are available on their website.

Valve Actuation

Steam

Instruments

Hot Water

Industrial PVF

YOUR MOST VALUABLE PARTNER

FOR SPIRAX SARCO CONTROL VALVES

PipeValves™

Since 1963

www.PipeValves.com
800.467.7122

Warning: Do not use this literature in place of reading, understanding, and following the manufacturer's spec sheets and operator's manual instructions which are available on their website.

Valve Actuation

Steam

Instruments

Hot Water

Industrial PVF

YOUR MOST VALUABLE PARTNER

FOR SPIRAX SARCO FLOW METERS

PipeValves™

Since 1963

www.PipeValves.com
800.467.7122

Warning: Do not use this literature in place of reading, understanding, and following the manufacturer's spec sheets and operator's manual instructions which are available on their website.

Valve Actuation

Steam

Instruments

Hot Water

Industrial PVF

YOUR MOST VALUABLE PARTNER

FOR SPIRAX SARCO REGULATORS

PipeValves™

Since 1963

www.PipeValves.com
800.467.7122

Warning: Do not use this literature in place of reading, understanding, and following the manufacturer's spec sheets and operator's manual instructions which are available on their website.

Valve Actuation

Steam

Instruments

Hot Water

Industrial PVF

YOUR MOST VALUABLE PARTNER

FOR SPIRAX SARCO STEAM TRAPS

PipeValves™

Since 1963

www.PipeValves.com
800.467.7122

Warning: Do not use this literature in place of reading, understanding, and following the manufacturer's spec sheets and operator's manual instructions which are available on their website.

Valve Actuation

Steam

Instruments

Hot Water

Industrial PVF

YOUR MOST VALUABLE PARTNER

FOR RIDGID PRESS TOOLS

PipeValves™

Since 1963

www.PipeValves.com
800.467.7122

Warning: Do not use this literature in place of reading, understanding, and following the manufacturer's spec sheets and operator's manual instructions which are available on their website.

Valve Actuation

Steam

Instruments

Hot Water

Industrial PVF

YOUR MOST VALUABLE PARTNER

FOR SPIRAX SARCO ACCESSORIES

PipeValves™

Since 1963

www.PipeValves.com
800.467.7122

Warning: Do not use this literature in place of reading, understanding, and following the manufacturer's spec sheets and operator's manual instructions which are available on their website.

Valve Actuation

Steam

Instruments

Hot Water

Industrial PVF

YOUR MOST VALUABLE PARTNER

FOR JFLOW AUTOMATION

PipeValves™

Since 1963

www.PipeValves.com
800.467.7122

Warning: Do not use this literature in place of reading, understanding, and following the manufacturer's spec sheets and operator's manual instructions which are available on their website.

Valve Actuation

Steam

Instruments

Hot Water

Industrial PVF

YOUR MOST VALUABLE PARTNER

FOR JFLOW VALVES

PipeValves™

Since 1963

www.PipeValves.com

800.467.7122

Warning: Do not use this literature in place of reading, understanding, and following the manufacturer's spec sheets and operator's manual instructions which are available on their website.

Valve Actuation

Steam

Instruments

Hot Water

Industrial PVF

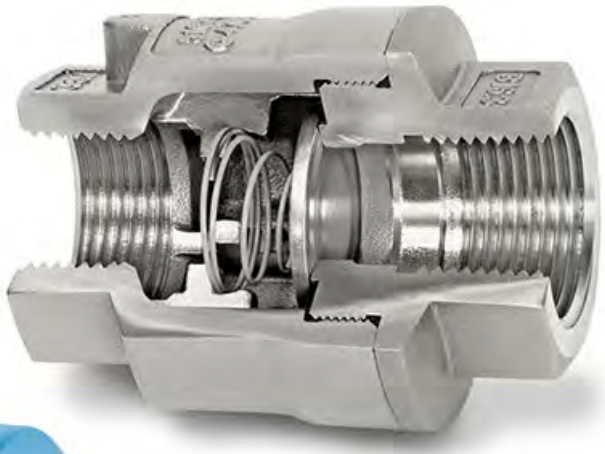

YOUR MOST VALUABLE PARTNER

FOR DFT CHECK VALVES

PipeValves™

Since 1963

www.PipeValves.com
800.467.7122

Warning: Do not use this literature in place of reading, understanding, and following the manufacturer's spec sheets and operator's manual instructions which are available on their website.

Valve Actuation

Steam

Instruments

Hot Water

Industrial PVF

YOUR MOST VALUABLE PARTNER

FOR PVC & CPVC PRODUCTS

LASCO, IPEX, SPEARS, CHARLOTTE

PipeValves™

Since 1963

www.PipeValves.com
800.467.7122

Warning: Do not use this literature in place of reading, understanding, and following the manufacturer's spec sheets and operator's manual instructions which are available on their website.

Valve Actuation

Steam

Instruments

Hot Water

Industrial PVF

YOUR MOST VALUABLE PARTNER

FOR PREVOST PRODUCTS

PipeValves™

Since 1963

www.PipeValves.com
800.467.7122

Warning: Do not use this literature in place of reading, understanding, and following the manufacturer's spec sheets and operator's manual instructions which are available on their website.

Valuable Services

Pipe Valves offers the quality products and the best services to improve your bottom-line performance.

- Pipe Shop: We cut, bevel, groove, and thread
- Energy audits, steam trap surveys, live steam lab demonstrations
- Daily local truck routes, emergency delivery options
- Phone, counter, email, fax and e-commerce ordering options
- Express sales counter pickup and tool rental
- Vendor Managed Inventory options customized to your needs
- Product specialists and staff engineers assist with problem solving
- Kitting Services - we can bag and tag to your specifications
- Bin management, bar code scanning and labeling solutions available
- PV University Classes, Where Seeing Is Believing: Actuation, Valves, Steam
- 24/7 emergency service available in many areas

Warning: Do not use this literature in place of reading, understanding, and following the manufacturer's spec sheets and operator's manual instructions which are available on their website.